THEORY OF CREATING PERSPECTIVE IMAGES

Riksiboyev U.T
Associate Professor of "Engineering and Computer Graphics" at the Tashkent Textile and Light Industry Institute
Khalilova H. E
is a senior teacher of "Engineering and Computer Graphics" at the Tashkent Institute of Textile and Light Industry.
Sindarova Sh. M
Tashkent Institute of Textile and Light Industry "Engineering and Computer Graphics" assistant

Abstract*: In visual arts, artists attach great importance to the direction of light and the strength of light. For example, when painting an angry person, if the light is directed from the part below the jaw, the psychological state intended by the work will be effectively revealed.*

Key word*: Lighting sources, central lighting and parallel lighting, creating shadows and cast shadows. The practical importance of light shade.*

The accuracy of the information about the structure and size of the object depends on how well it is illuminated. If there was only light and no shadow, or only darkness (darkness) and no light, it would not be possible to see and imagine anything with the naked eye.

A perspective is an image made in the central projection method, taking into account the characteristics of human vision. Depending on the place of use of the perspective and on what surface it is performed, it is divided into the following types:

Observational perspective. In this, the rules of depicting the object as it appears are learned.

Aerial perspective. The image of the object is depicted in colors depending on the intensity of illumination. The depth and breadth of space is expressed through color.

An analytical perspective. The image of the thing is done graphically-analytically, that is, by calculating the position of points.

Geometric perspective. Perspective is the basis of image creation, and it is divided into the following types according to the type of surface on which the image is created:

A correctly constructed perspective of an object provides information about its structure. However, the judicious use of light and shadow in his perspective image significantly increases the object's clarity. Therefore, the intelligent use of light and shadow gives the artist an opportunity to find an interesting and complex compositional solution.

In the space that surrounds us, the light beam spreads along a straight line. The light beam illuminates the side (part) of the object facing it. The unlit part is the private shadow.

The boundary of the personal shadow is created by the light beam hitting the object. This border is the line separating the illuminated and non-illuminated (private shadow) parts of the object. The projection of this line on a plane or surface in the direction of light is the cast shadow of the object. Therefore, before determining the cast shadow of an object, it is necessary to make its own shadow. The shadow of an object on its surface is weakened by the rays reflected from the objects around it. Because of this, the object's shadow will be darker than its own shadow. In addition, the light beam is at different angles to the surface of the object. Therefore, parts of the body's surface receive light energy in different amounts. As a result, there is no sharp boundary line between the lighted and shadowed parts of the rotation surfaces. The measured angle between the light beam and the surface normal is the angle formed by the beam with the surface. A number of physical properties of shadow, as mentioned above, are widely used by artists (Fig. 1a).

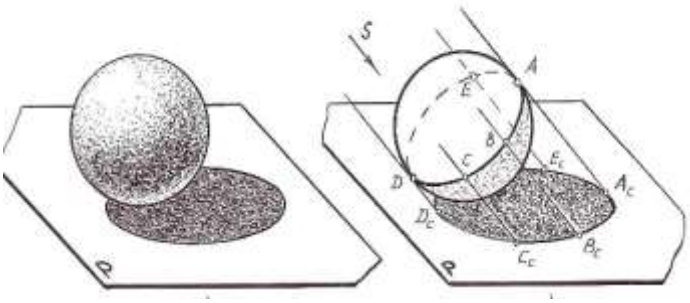

a) **b)**

1-fig.

In central and parallel projections, shading is done from a purely geometric point of view (except for aerial perspective). The physical properties of the shade are not taken into account (Fig. 1, b).

Two lighting sources are mainly used to make shadows.

Artificial (central) lighting source.

In artificial lighting, light sources (light bulbs, candles, lanterns, etc.) are located at a short distance from the object, that is, in three-dimensional space, and they are called point sources. In central lighting, the light beam hits the object and creates a pyramid or cone surface. Central lighting is mainly used to create shadows in the interior. If there are two or more lighting sources, then some of the falling shadows will overlap. Then the overlapping part of two falling shadows is a full shadow, and the part that is not overlapping is a half shadow. By creating a shadow in the interior, room furniture and lighting source positions are checked during the project process and the most optimal option is selected. In order to create a shadow in central lighting, the light source and its projections on the shadowing plane or surfaces must be provided.

Figure 2, a shows the perspective apparatus and the section AV perpendicular to the plane of objects and point V lying on it. Rays radiating from the source of artificial lighting

C form a shadow AVC at H of the section AV. Since point V lies in the plane of the object, its shadow overlaps with itself. For this, a plane of rays is passed through the section AV, and it intersects with the plane of objects and gives the shadow of the section AV at H. Therefore, the light plane is drawn by connecting the light source S with point A, and its projection on H with point V. Lines SA and S1V intersect to form the shadow AC of point A in the object plane.

To perform this process in perspective, perspective images of the AV section and SS1s are constructed on the map. Then point S is connected to AK and S1 to VK, and their point of intersection is AKC. The line VKAKC is the shadow of the section AKVK. Figure 2, b shows the working situation of the above process, i.e. performing the shading of the AV section on the image itself. Here again the lines SA and S1VK intersect to define AKC, AKC is the point A, and the line VKAKC is the perspective shadow of the line AV.

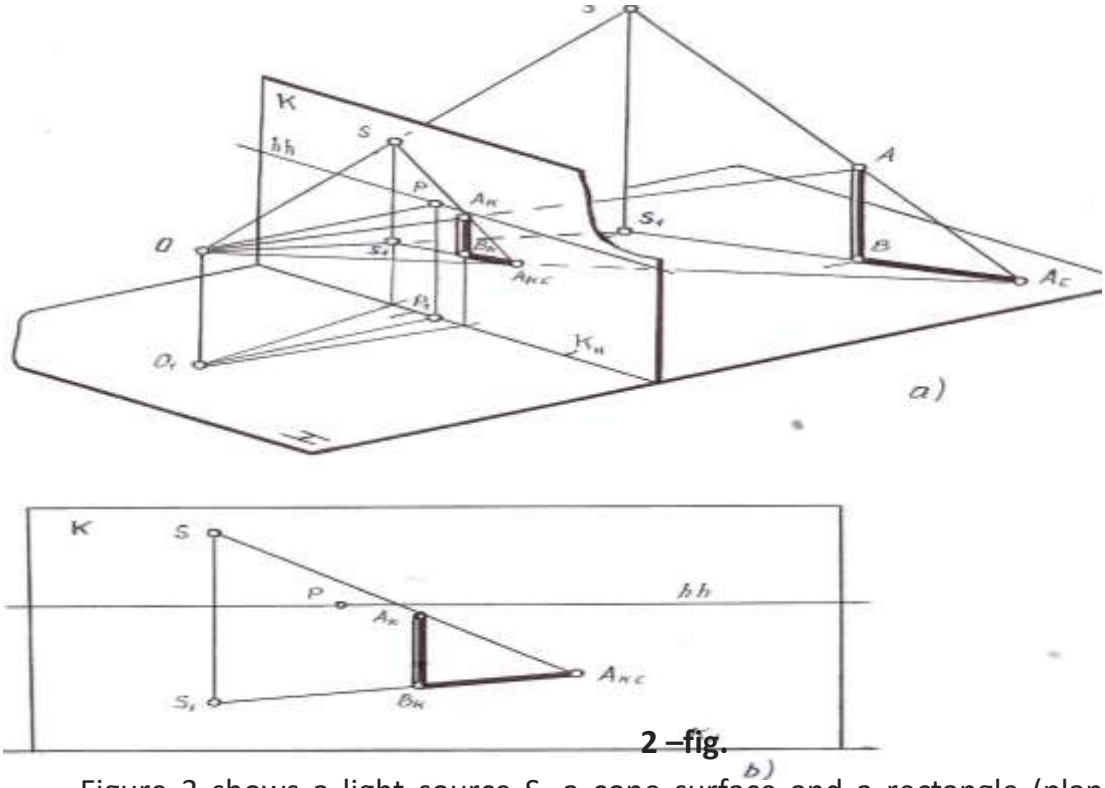

2 –fig.

Figure 3 shows a light source S, a cone surface and a rectangle (plane) AVCE in a vertical position. The shade of AVCE is made in the same way that we shade the section AV in the previous example. The surface of the cone also casts a shadow on the object plane and on the rectangle AVCE. To do this, the shadow TC is determined by combining S1 with the projection T1 of the cone tip T on the object plane, and S with the tip T. An attempt is made from the point TC to the base of the cone and its shadow in H is formed. Lines 1TC and TC2 intersect AE at points 3 and 4, where the shadow of the cone on the ground is refracted. To make the shadow of the cone AVCE in the plane, the shadow T□C of the tip of the cone T in the vertical plane is determined. Points 3 and 4 are joined by T□C to form the shadow of the cone on AVCE. The private shadow of the cone is bounded by lines 1T

and T2.

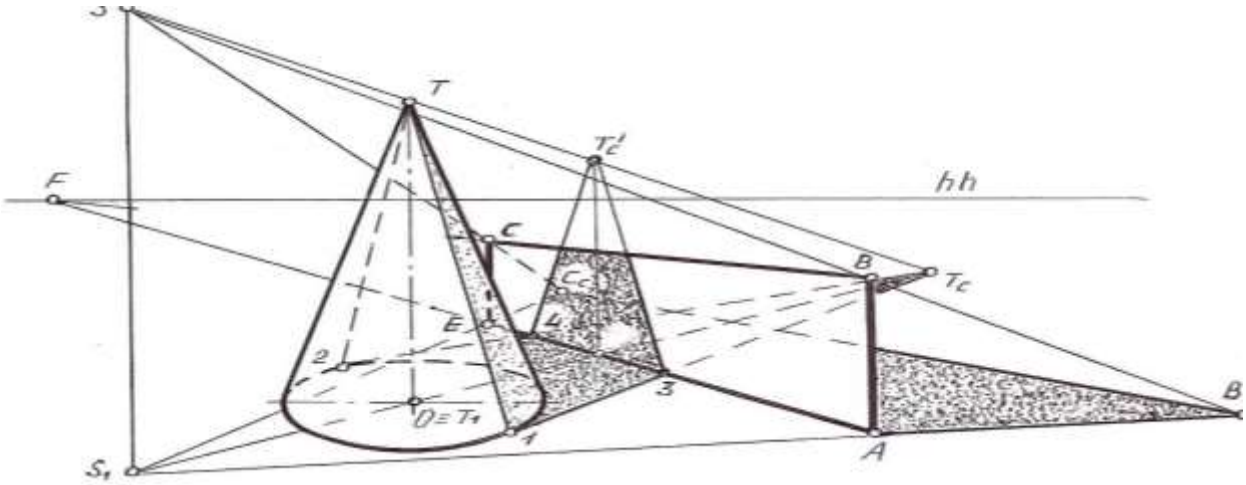

3 –fig.

Natural (parallel) lighting source.

The Sun and the Moon, which are very far away from us (conditionally infinite distance), are accepted as sources of natural illumination. Light rays radiating from them are considered to be parallel to each other, and such lighting is called parallel lighting. In parallel lighting, light rays hit the surface of the object and form a prism or cylinder surface. Let us take the perspective of the sun as S and the perspective of its base as S1. The sun perspective S is above or below the horizon line and its base perspective S1 is always on the horizon line. Only at sunrise and sunset do S and S1 overlap on the horizon.

Figure 4, a shows the geometric apparatus of the perspective, the direction of light S and the cross-section AV set perpendicular to the plane of the object. To make the shadow of point A on the object plane, a ray plane is passed through the section AV, and its line intersecting with the object plane is made. This line passes through the point V and is directed towards the base S1 of the light source S at H. Here, S1 is the projection of S on H by the direction of the light ray.

Now a straight line parallel to the direction of light S is drawn through the point A and its meeting point with the line of intersection of the planes passing through the point V (the plane of light and the plane of the object) is AC is determined. Point AC is the shadow of point A in the object plane, and section VAC is the shadow of section AV. To create the

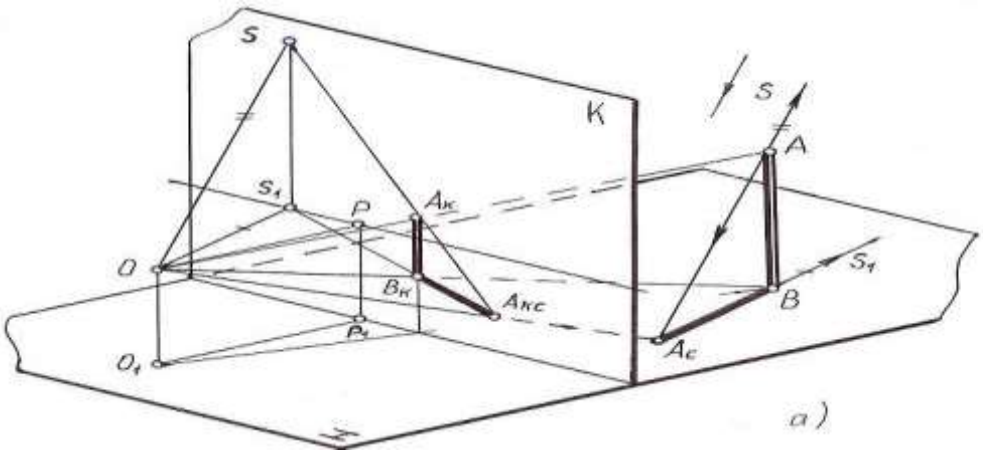

perspective of the sun in the picture, parallel straight lines are drawn from the point of view

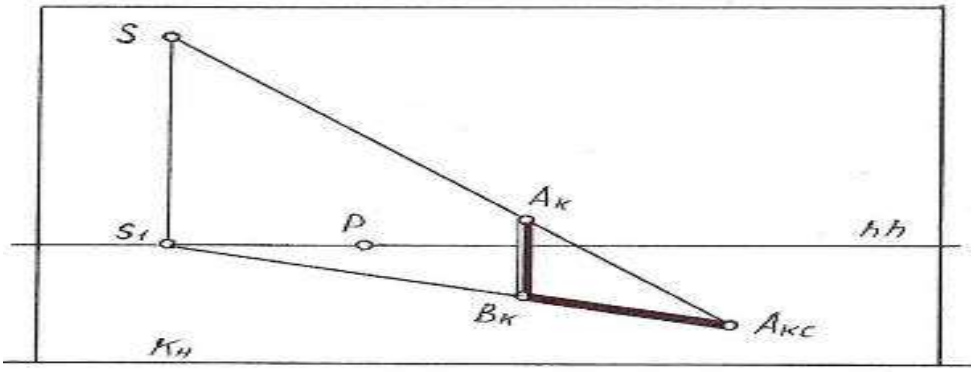

O to the direction n of light S and its projection S1 on the object plane. These lines intersect with the picture plane to give points S and S1.

b)

4-fig.

Point S on the picture is the direction of the light beam, point S1 is the point of its projection on the object plane. Through the point of view O, the perspective of section AV is made AKVK. To make the perspective of the section shadow AKVK, draw straight lines from point S through AK, through point S1 through VK, and find their point of intersection AKC. AKC is the perspective of the shadow of the point A, and the section VKAKC is the perspective of the shadow of the section AV. Fig. 4, b shows the creation of the cross-sectional shade of AV in the picture plane itself. Here S point AK is joined with S1 point VK and their intersection point AKC is determined. The cut VKAKC is the shadow of the cut AKVK.

In the design of architectural structures, the rays falling from the natural lighting source (the sun) and the shadows created by them are taken into account. The position of the observer in relation to the sun or the observer of the sun can be different. Below are the characteristic positions of the sun relative to the observer (Figure 5).

1. The sun is in front (the space of things), on the left.
2. The sun is in front (the space of things), on the right.
3. The sun is located on the right in the back (abstract space).
4. The sun is on the left in the back (abstract space).
5. The sun is on the left, the light beam is parallel to the picture. The direction of light will not have a point of descent.
6. The sun is on the right, the light beam is parallel to the picture.
7. When the sun rises or sets on the right. In this case, the length of the falling shadow of the object cannot be determined.

8. When the sun rises or sets on the left. Even in this case, the length of the falling shadow of the object cannot be determined. However, if there is a plane or surface behind the object's shadow, it will be possible to determine its falling shadow.

LIST OF LITERATURE:

1. Sindarova, S. M. (2021). O‘YINLI TEXNOLOGIYALARDAN FOYDALANISH ORQALI O ‘QUVCHILARNING BILIM, KO ‘NIKMA VA MALAKALARINI SHAKLLANTIRISH (CHIZMACHILIK FANI MISOLIDA). Oriental renaissance: Innovative, educational, natural and social sciences, 1(11), 686-691.

2. Ортиков О. А. УРАБОТКА НИТЕЙ В СТРОЕНИИ ТКАНЕЙ МЕЛКОУЗОРЧАТОГО ПЕРЕПЛЕТЕНИЯ //Электронный периодический рецензируемый научный журнал «SCI-ARTICLE. RU». – 2019. – С. 21.

3. Ортиков О. Changes in the Cleaning Efficiency of Cotton from Small and Large Contaminants //Scienceweb academic papers collection. – 2021.

4. Mirzaliev, Z., Sindarova, S., & Eraliyeva, S. (2019). Organization of Independent Work of Students on Drawing for Implementation of the Practice-Oriented Approach in Training. International Journal of Progressive Sciences and Technologies, 17(1), 297-298.

5. Renessans, O. (2021). IQTIDORLI TALABALAR BILAN SHUG’ULLANISH METODIKASI.(MUHANDISLIK FANLARI MISOLIDA). Oriental renaissance: Innovative, educational, natural and social sciences, 1(8), 32-39.

6. Рихсибоев, У. Т., Халилова, Х. Э., & Синдарова, Ш. М. (2022). AutoCAD дастуридан фойдаланиб деталлардаги ўтиш чизиқларини қуришни автоматлаштириш. Science and Education, 3(4), 534-541.

7. Sindarova, S. M., Rikhsibaev, U. T., & Khalilova, H. E. (2022). THE NEED TO RESEARCH AND USE ADVANCED PEDAGOGICAL TECHNOLOGIES IN THE DEVELOPMENT OF STUDENTS'CREATIVE RESEARCH. Academic research in modern science, 1(12), 34-40.

8. Maxammatovna, S. S. (2022). Methods of Solving Some Problems of Teaching Engineering Graphics. *Spanish Journal of Innovation and Integrity*, *7*, 97-102.

9. Valiyev A. N. Y., Ibrahimova D. H. Opportunities for the development of creativity skills of students in the process of teaching drawing science //ACADEMICIA: An International Multidisciplinary Research Journal. – 2021. – Т. 11. – №. 3. – С. 2201-2209.